HK-032/55 Combination inserts

250/50V 10/4A 32/55+ ⏚

Inserts

Hoods/Housings: size 10B, please find the details on page 15-39~15-69.

Crimp terminal

order crimp contacts separately

Insert	Designation	Order No.
Male	HK-032/55-MC	128 087 010 0001
Female	HK-032/55-FC	128 087 020 0001

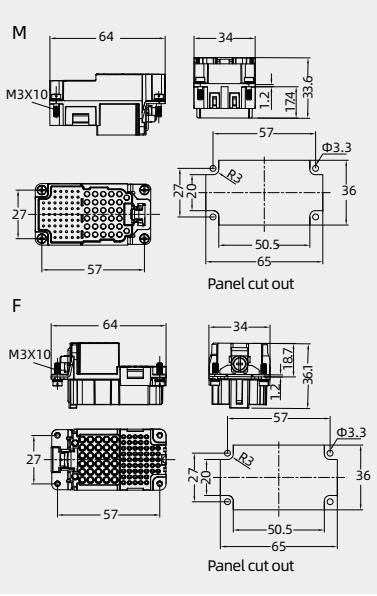

Crimp contacts

Crimp contacts 5A

Contact resistance ≤ 3mΩ
silver plated

gold plated

Male	Order No.	Female	Order No.
CSSM-0.25	101 014 110 0101	CSSF-0.25	101 014 120 0101
CSSM-0.33	101 014 110 0201	CSSF-0.33	101 014 120 0201
CSSM-0.52	101 014 110 0501	CSSF-0.52	101 014 120 0501
CSGM-0.25	101 014 210 0101	CSGF-0.25	101 014 220 0101
CSGM-0.33	101 014 210 0201	CSGF-0.33	101 014 220 0201
CSGM-0.52	101 014 210 0501	CSGF-0.52	101 014 220 0501

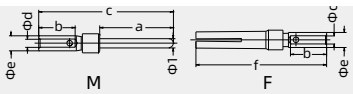

a	b	c	d	e	f
8.10	4.0	14.8	0.64	1.66	14.4
8.10	4.0	14.8	0.90	1.66	14.4
8.10	4.0	14.8	1.12	1.66	14.4

Wire gauge		Stripping length
0.09-0.25 mm²	AWG 28-24	5 mm
0.13-0.33 mm²	AWG 26-22	5 mm
0.33-0.52 mm²	AWG 22-20	5 mm

Stamped contacts 5A

Contact resistance ≤ 10mΩ

silver plated

gold plated

coil stock

Note: 10kpcs/ volume

Male	Order No.	Female	Order No.
CSSM-0.82P	101 014 110 0750	CSSF-0.82P	101 014 120 0750
CSGM-0.82P	101 014 210 0750	CSGF-0.82P	101 014 220 0750

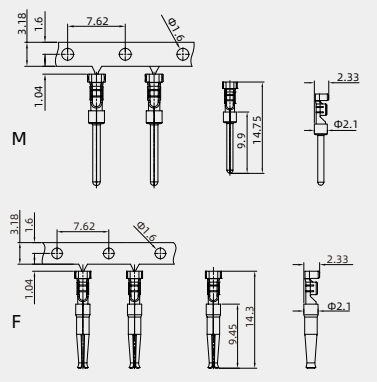

Notes: The tools for crimp terminal may influence the product quality and stability. Please select the tools recognized by our company.